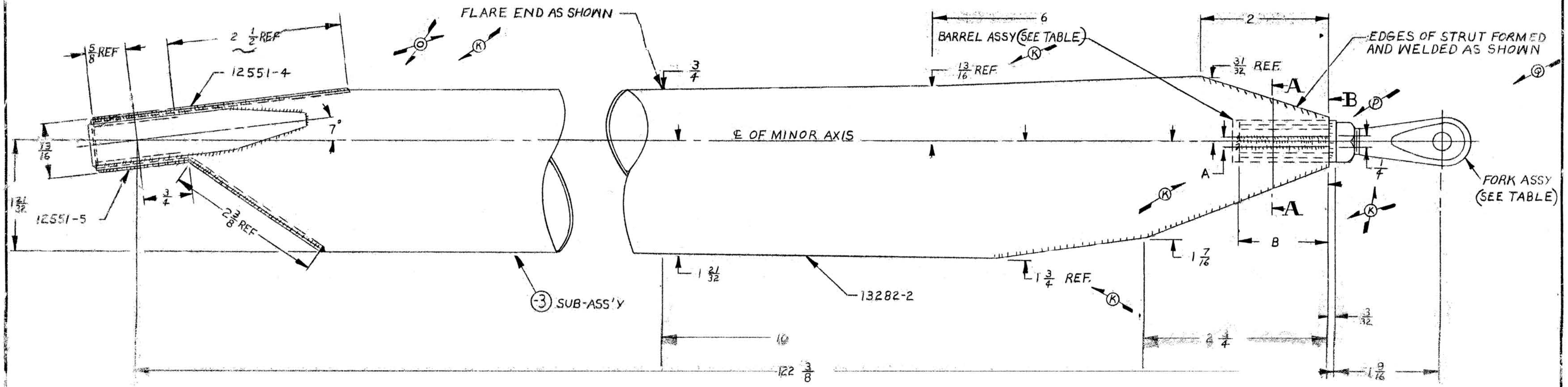

5/8 REF
2 1/2 REF
12551-4
13/16
1 21/32
12551-5
3/4
2 3/8 REF
7°
FLARE END AS SHOWN
3/4
℄ OF MINOR AXIS
6
BARREL ASSY (SEE TABLE)
13/16 REF
2
31/32 REF
EDGES OF STRUT FORMED AND WELDED AS SHOWN
A
B
1/4
FORK ASSY (SEE TABLE)
A
B
1 7/16
1 3/4 REF
1 21/32
-3 SUB-ASS'Y
13282-2
16
2 3/4
3/32
122 3/8
1 9/16
K
O
G
P

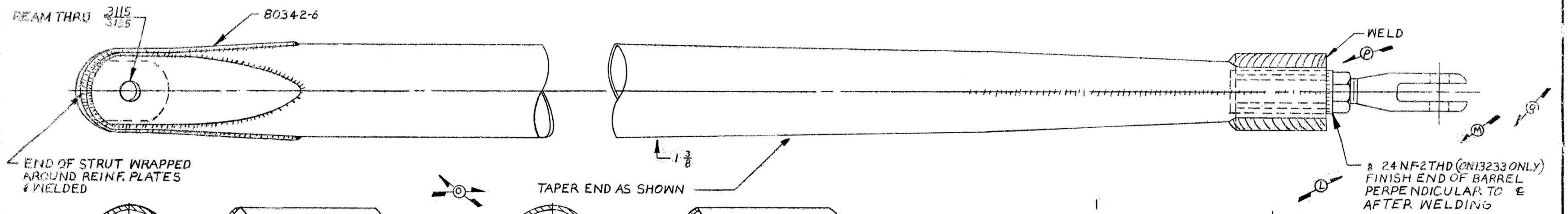

REAM THRU 3115/3135
80342-6
WELD
END OF STRUT WRAPPED AROUND REINF. PLATES & WELDED
1 3/8
TAPER END AS SHOWN
5/8 24 NF-2THD (ON 13233 ONLY) FINISH END OF BARREL PERPENDICULAR TO ℄ AFTER WELDING
P
G
M
L
O

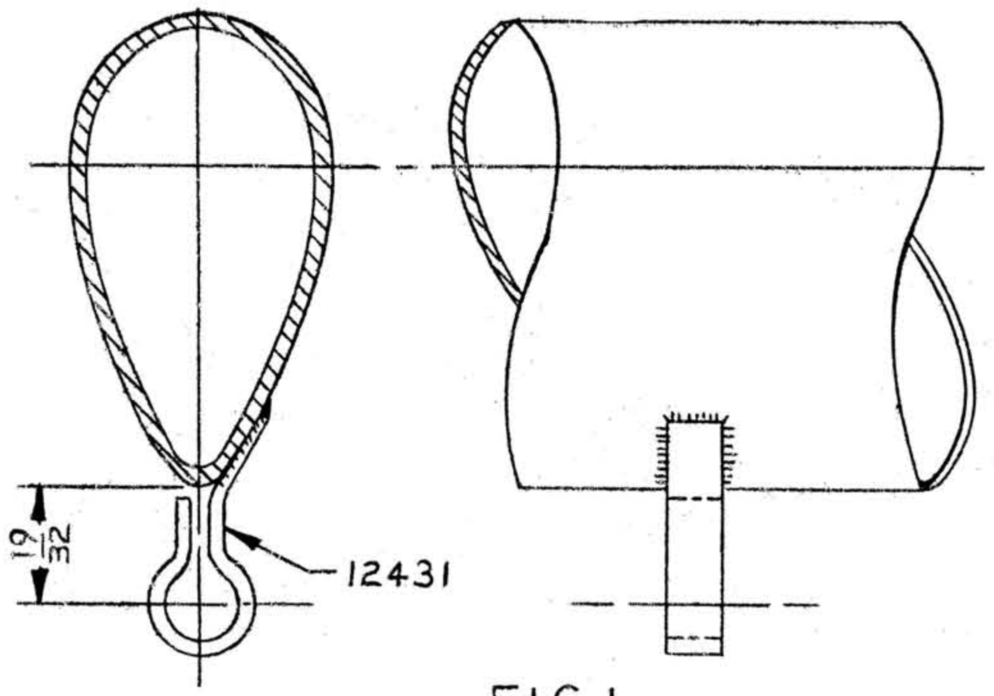

FIG 1.
FULL SIZE

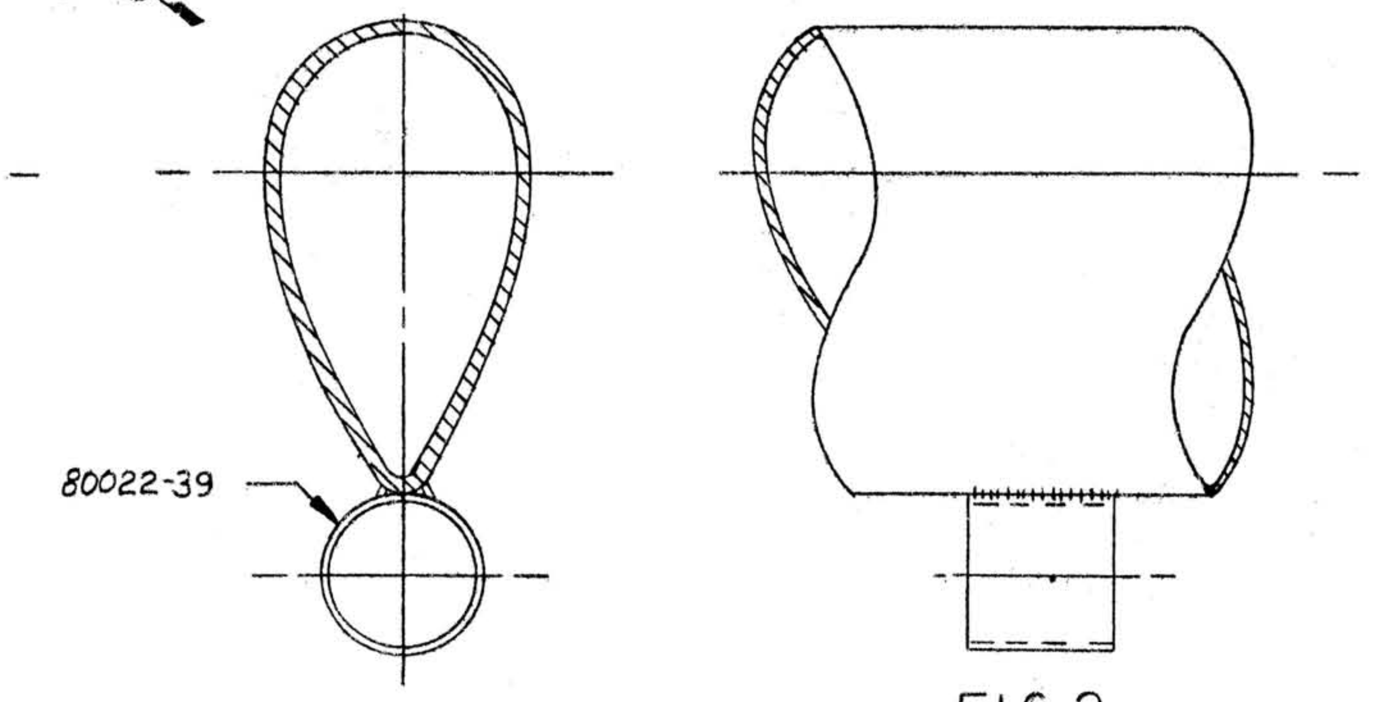

FIG 2.
FULL SIZE

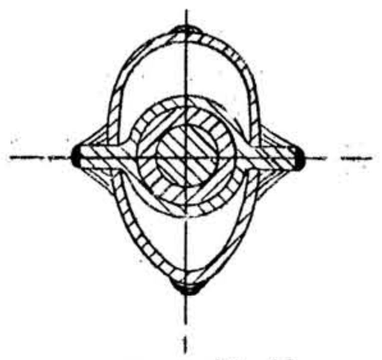

SECTION A-A

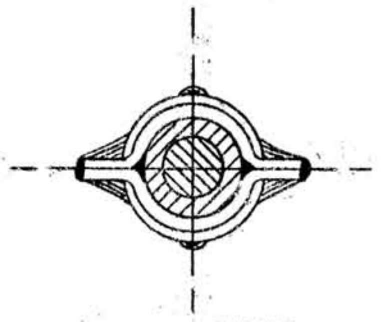

SECTION B-B

NOTE: 1. PART 13233 CONSIDERED UNSATISFACTORY -REPLACED BY 13233-4

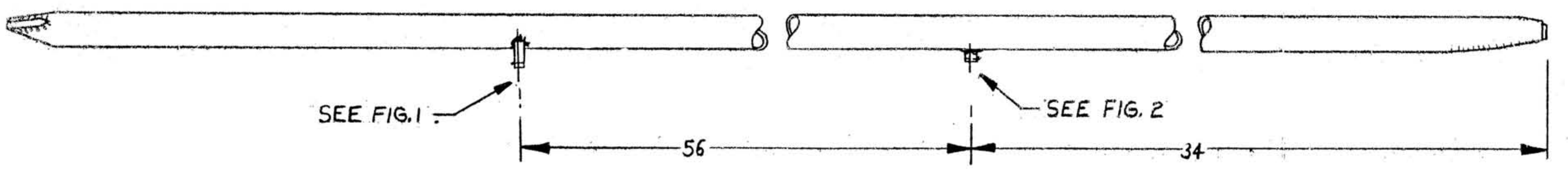

SEE FIG. 1
SEE FIG. 2
56
34

SCALE 1 1/2 = 1 FT.

ASSY. NO.	BARREL NO.	FORK NO.	"A"	"B"	REMARKS
13233	11711	11281	3/16	1 3/8	SEE NOTE 1
13233-4	12521	13770	1/4	1 13/16	

R

NO REQ.	PART No.	MATERIAL	
1	11711	BARREL ASSY.	USED ON 13233 ONLY
1	11281	FORK ASSY.	
1	80342-6	STRAP	
1	80022-39	HOUSING	
1	13282-2	TUBE	
1	12551-5	END PLATE ASS'Y.	
1	12551-4		
1	12431	CLAMP	
1	12521	BARREL ASS'Y. (ON-4 ONLY)	
1	13770	FORK ASS'Y. (ON -4 ONLY)	
—	-3	CONSISTS OF 13233 LESS 11281	
	~~11412~~	THIS PART NO. OBSOLETE. SEE DWG OF SAME NO DATED 12-23-41	

LET.	REVISION	DATE	BY
R	13770 WAS 13710 & AN315-7R	4-16-52	IMM
Q	-4; TABLE & NOTE ADDED AN315-7R ADDED FOR -4	3-27-52	IMM

LET.	REVISION	DATE	BY
P	VIEWS REVISED	8-26-46	I.D.M.
O	VIEWS & NOTES REVISED	5-6-44	J.B.M.
N	4 1/2, 6, 1 5/16, 1 3/8, 3/4, 13/16, REF REMOVED	5-6-44	J.B.M.
M	NF-2THD WAS NF-3 THD	9-22-43	C.E.K.
L	NOTE REVISED	7-31-43	M.G.S.
K	REF; 5/16, 1/4 & 1 3/8 ADDED	7-31-43	M.G.S.
J	REDRAWN & REVISED	7-2-43	M.G.S.

SCALE FULL SCALE & NOTED
FINISH — PIPER SPECIFICATION #10
MANUFACTURING PRACTICES — PIPER SPEC. #9

THIS DRAWING IS THE PROPERTY OF THE PIPER AIRCRAFT CORP. AND ITS POSSESSION BY UNAUTHORIZED PERSONS SHALL NOT BE CONSTRUED AS PERMISSION TO REPRODUCE FOR SALE, IN WHOLE OR IN PART, ANY DEVICES SHOWN THEREON.

PIPER AIRCRAFT CORP.
LOCK HAVEN, PENNA.

STRUT ASSEMBLY-FRONT

For Gross Weight Increase
Paul O'Donnell J3

DRAFTSMAN	CHECKER
M.G.S.	L.E.K.
7-2-43	7-10-43

13233